RV Roof Cover (CLASS A) Installation & Maintenance

INSTALLING THE COVER'S WHEEL ANCHORS:

1. Your cover comes with four wheel anchors that will be installed on each tire (fig. 3) .
2. Starting with the front tire, toss the left side of the anchor poles (see 3a.) behind your RV's tire. Pull both anchor poles outward so that the rear anchor strap (see 3b.) attached to each pole fits up against the back of the tire to ensure the anchor poles are fully extended.
3. Snap the wheel anchor buckle (see 3c.) in place and tighten the strap for a snug fit. The position of the poles should fit parallel to the tire (see fig. 4). **If you have an RV with smaller tires, unsnap the wheel anchor buckle and twist either pole one complete turn until you've taken enough slack out of the rear anchor strap to fit your tire (see fig. 5).**
4. Install the anchors on all four tires. If you have dual tires on the rear, toss the anchor pole through the center of the two tires and follow the instructions in the previous step.

fig. 3

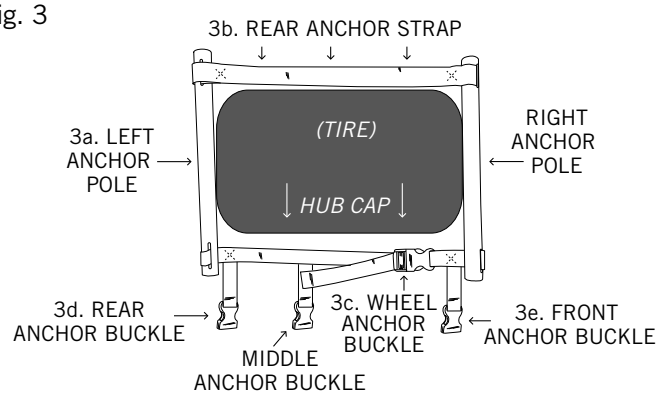

fig. 4

Poles may tighten to a slight angle, but not to this extreme.

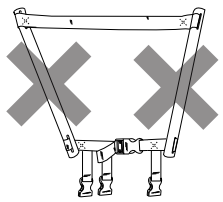

fig. 5

Twist pole so strap wraps around pole, making strap shorter.

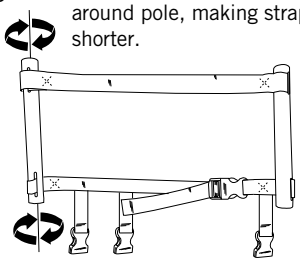

fig. 6

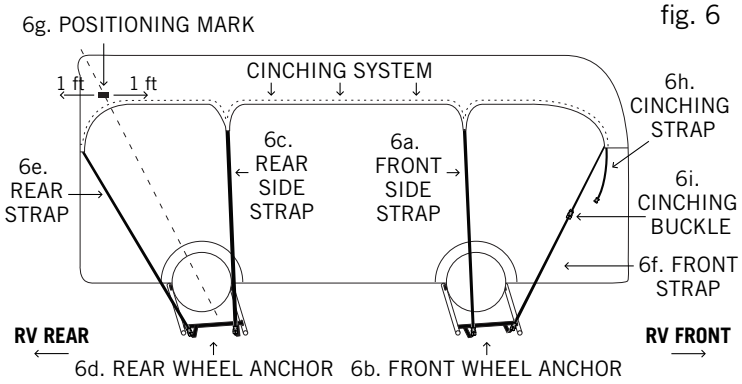

CLASS A COVER INSTALLATION :

1. Bring the rolled-up cover in the storage bag to the front passenger side of your RV.
2. Unsnap the buckled strap from the storage bag and take it with you as you climb on top of the roof, leaving your partner with the cover on the ground.
3. Toss the male end of the bag strap down to your partner and connect the buckle to the bag.
4. Easily hoist the cover up onto the roof and remove from the bag. Toss empty bag with attached hoisting strap back down to your partner.
5. Find the loose end of the rolled cover (FRONT) and toss it over the front of your RV.
6. As you unroll the cover towards the rear, unfold the sides of the cover and drape them over the sides of your RV. As the front side straps (see fig. 6a) become exposed, toss them down to your partner. Have your partner attach the straps to the rear buckle (see fig. 3d) on the front wheel anchor (see fig. 6b.) on both sides. Tighten the straps loosely, but tight enough so the cover won't blow away.
7. Continue to unroll the cover, draping the sides of the cover over the sides of your RV until the rear side straps (see fig. 6c) are exposed. Toss the rear side straps down to your partner and have them attach the straps to the front buckle (see fig. 3e) of the rear wheel anchor (see fig. 6d) on both sides.
8. Once you've gotten to the rear of the RV make sure the cover on the opposite side of the ladder is covering the corner of the RV, and come down the ladder bringing the other side of the cover down with you.
9. Connect both rear straps (see fig. 6e) to the rear buckles (see fig. 3d) of the rear wheel anchors. Tighten the straps loosely, but tight enough so the cover won't blow away.
10. Connect both front straps (see fig. 6f) to the front buckles (see fig. 3e) of the front wheel anchors. Tighten the straps loosely, but tight enough so the cover won't blow away.
11. Review the cover's position on the RV. There is a positioning mark (see fig. 6g) on each side of the cover about 5 feet from the rear hem. If you drew an imaginary line from the center of the rear tire to the upper rear corner of the RV, this positioning mark should be located within a foot on either side of your imaginary line.
12. You can reposition the cover by pulling the front or rear straps (see fig. 6e & 6f) in the direction you need. **Do NOT pull on cover material. PULL STRAPS ONLY.**
13. Once the cover is positioned correctly (see step 11 for correct positioning), tighten the two front and rear straps (see fig. 6e & 6f) securely. **NOTE: Do not tighten the side straps at this time.**
14. Find the cinching strap (denoted by a green mark, see fig. 6h.) located on both front corners. This cinching strap runs loosely through the side hem on each side of the cover. Snap the cinching strap (see fig. 6h) onto the cinching buckle (see fig. 6i) located on both front straps. Pull the cinching strap on each side until you remove any and all slack from the sides of the cover. After being pulled tight the excess cinching strap length can be rolled & secured with the velcro strap near the cinching buckle.
15. Go around the RV and tighten all four side straps (see fig. 6c & 6a) to ensure a snug fit. Cover installation is now complete.

RV Roof Cover (CLASS A) Installation & Maintenance

ADCO SINCE 1955

CONTENTS

- ☒ 1 - Tyvek® RV Roof Cover
- ☒ 1 - Storage Bag
  (Includes pockets for 4 metal wheel anchors and bag strap)
- ☒ 4 - Metal Wheel Anchors
- ☒ 5 - Ten foot straps
- ☒ Adhesive Reinforcement Material
  (provided for cushioning those sharp edges on your RV)

It will be helpful if you have a partner for installation.

fig. 1

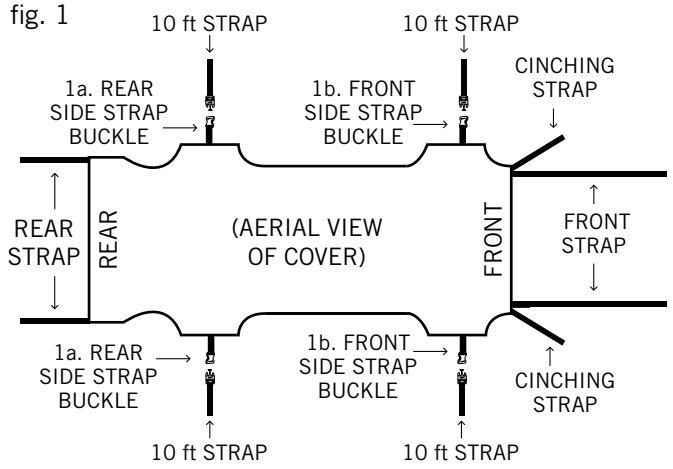

PREPPING CLASS A COVER FOR INSTALLATION: Required for a first-time installation and when removing the cover from the RV.

A. Identify the front of the cover by the FRONT label. Lay it lengthwise on the ground, making sure the solid white exterior is facing upwards.

B. Locate the two side strap buckles on each side of the cover (see fig. 1a & 1b) and attach two 10' straps to each side (see fig. 1). Rubber bands should be removed.

C. With your partner spread the cover lengthwise and fold the sides inwards towards the middle until the cover is folded appoximately 2 feet wide (see fig. 2 & 2b).

D. Make sure the straps and buckles are inside the folded cover and not draped outside of the cover (see fig. 2b).

E. Roll the cover from the rear to the front, keeping it at a width of approximately 2 feet.

F. The loose end of the rolled up cover will be the front of the cover.

G. Attach the last 10' strap to the storage bag buckle.

H. Place the cover in the storage bag and you're ready to start the installation.

fig. 2 *(AERIAL VIEW OF COVER)*

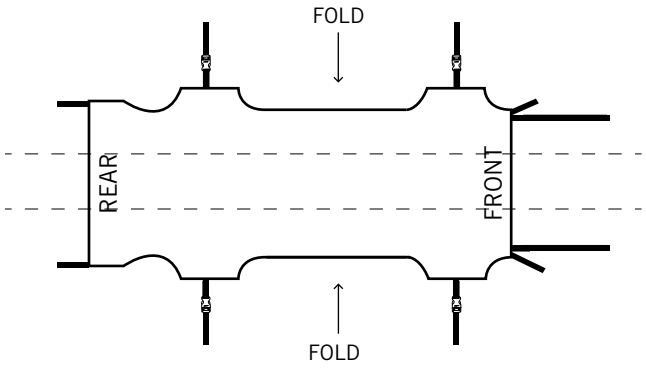

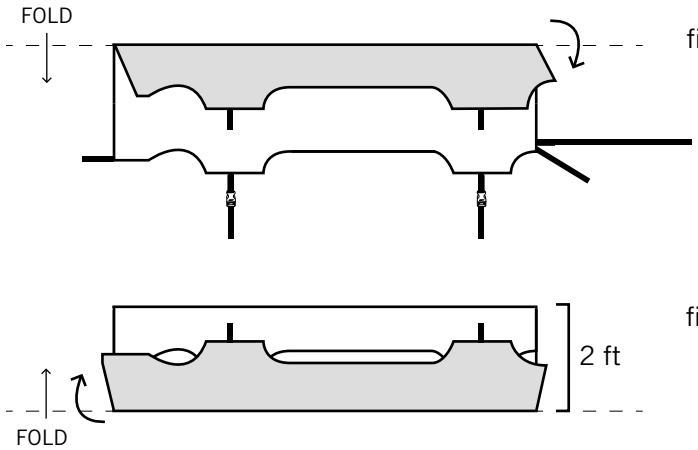

fig. 2a.

fig. 2b.

See other page for Class C, Travel Trailer, Toy Hauler, & 5th Wheel instructions.

FRONT

For more information on covering your RV as well as video instructions visit www.ADCOprod.com

ADCO SINCE 1955