DIMENSION SHEET - POP-UP TRUCK CAMPER

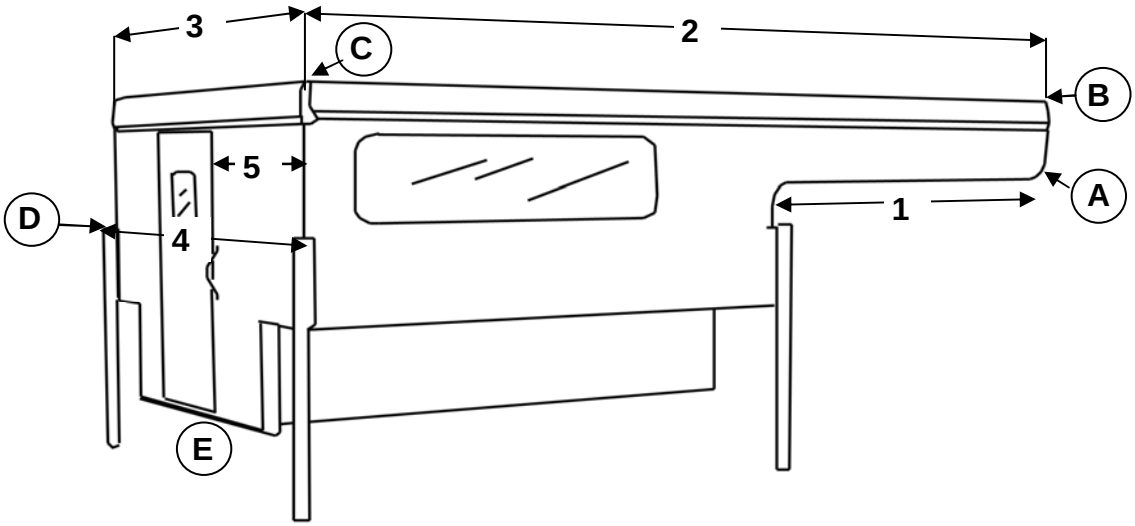

Lengths - Measured Horizontally

# 1	Length of cabover	_____
# 2	Roof Length	_____

Widths, Measured Side to Side

# 3	Width of camper body	_____
# 4	Width at top of rear jacks	_____
# 5	Distance from side to entry door	_____

Heights (from ground in stored position)

A	Height to bottom of cabover	_____
B	Height at front of roof	_____
C	Height at rear of roof	_____
D	Height at top of jacks	_____
E	Ground Clearance	_____

Camper Information

1 Do you have any awnings? _____ How far does it extend out from the side (closed) _____

Location? _____

2 Do you have any other accessories _____ If yes, Please sketch in dimensions

NOTES:

_____

_____

_____

_____

_____

_____

_____

_____

_____

A photo of the camper will help us make the pattern. The photo can be returned if requested.

YEAR _____ NAME _____

MAKE _____ Daytime phone _____

MODEL _____ Date of order _____

FLOOR PLAN _____